PRO5 FREEHUB ASSEMBLY
E-BIKE_XD_54

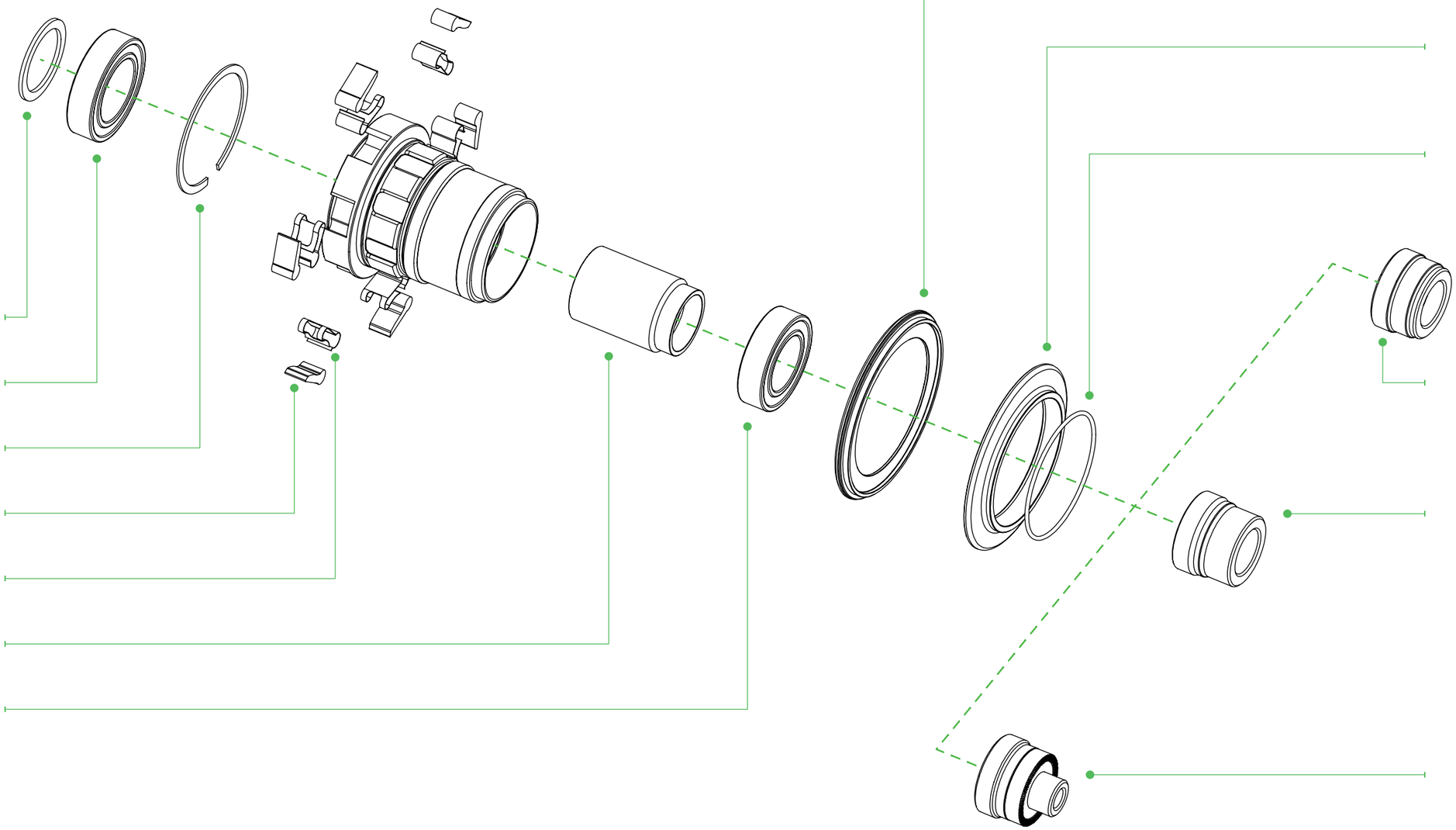

REF: HUB557

HOPETECH.COM